491.3.725

Vacuum cleaner motor performance

DOMEL®

Tangential bypass discharge vacuum cleaner motors 491.3.725 / 1700W / 120V / 60Hz are used for wet and dry aspiration. They are suitable for central vacuum cleaners. Technical data and dimensions are given in the table. Vacuum cleaner motors consist of universal commutator motor and two fan stages. The rotor is supported with two ball bearings enabling vertical or horizontal installation of motor.
The motor is designed for insulation class 105 (A) and constructed according to EN 60335-1. The motor has provision for grounding.

Max. power 1800W

Technical data:

Normal operation:	P_m	>=	1710	W
Vacuum:	P_{max}	>=	27,3 109,7	kPa in H_2O
Air Flow at φ50:	$Q_{\varphi 50}$	>=	63 134	dm^3/s CFM
Air Power:	P_{2max}	>=	620	W
Efficiency:	η_{max}	>=	36	%
Mass:	m	=	2,58	kg

Voltage:	120 V
Frequency:	60 Hz
Nominal Power:	1700 W

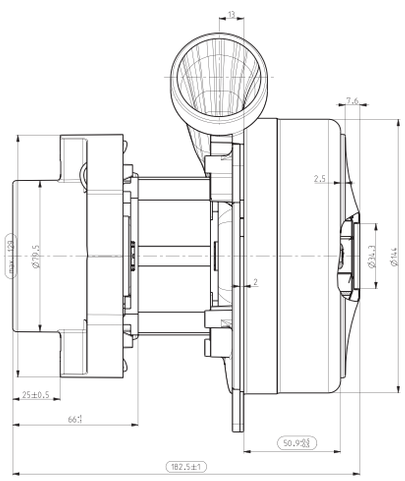

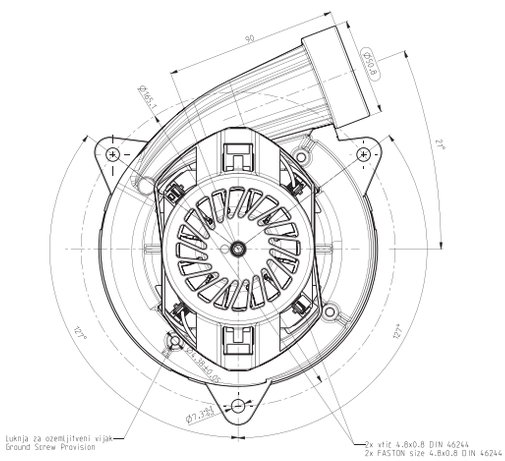

Dimensional and performance data are subject to change without notice.

Orifice		Current	Input Power	Speed	Pressure		Air Flow		Air power	Efficiency
mm	in*	A	W	min^{-1}	kPa	in H_2O	dm^3/s	CFM	W	%
50	2	15,79	1808	22364	2,0	7,2	66,7	142,0	131	7,3
40	1 1/2	15,71	1799	22401	4,3	21,6	62,8	129,1	270	15,0
30	1 1/8	15,62	1790	22451	10,0	45,5	53,1	106,7	531	29,7
23	7/8	15,22	1746	22798	16,6	69,2	39,5	79,6	655	37,5
19	3/4	14,43	1662	23553	19,9	79,8	29,3	62,4	584	35,2
16	5/8	13,55	1570	24437	22,3	90,0	21,9	45,9	490	31,2
13	1/2	12,63	1468	25507	24,6	99,6	15,2	30,9	373	25,4
10	3/8	11,68	1366	26799	26,6	107,4	9,3	18,3	248	18,2
6	1/4	10,55	1240	28469	27,8	111,6	4,1	8,4	113	9,1
0	0	9,68	1142	29931	28,8	115,5	0,0	0,0	0	0,0

Data above represent the preformance of an average motor sample. Individual data may vary due to normal manufacturing variations.
* Orifice in inch is only approximative.